Bambu Lab P1S

3D Printer

Quick Start

Please review the entire guide before operating the printer.

* Safety Notice: Do not connect to power until assembly is complete.

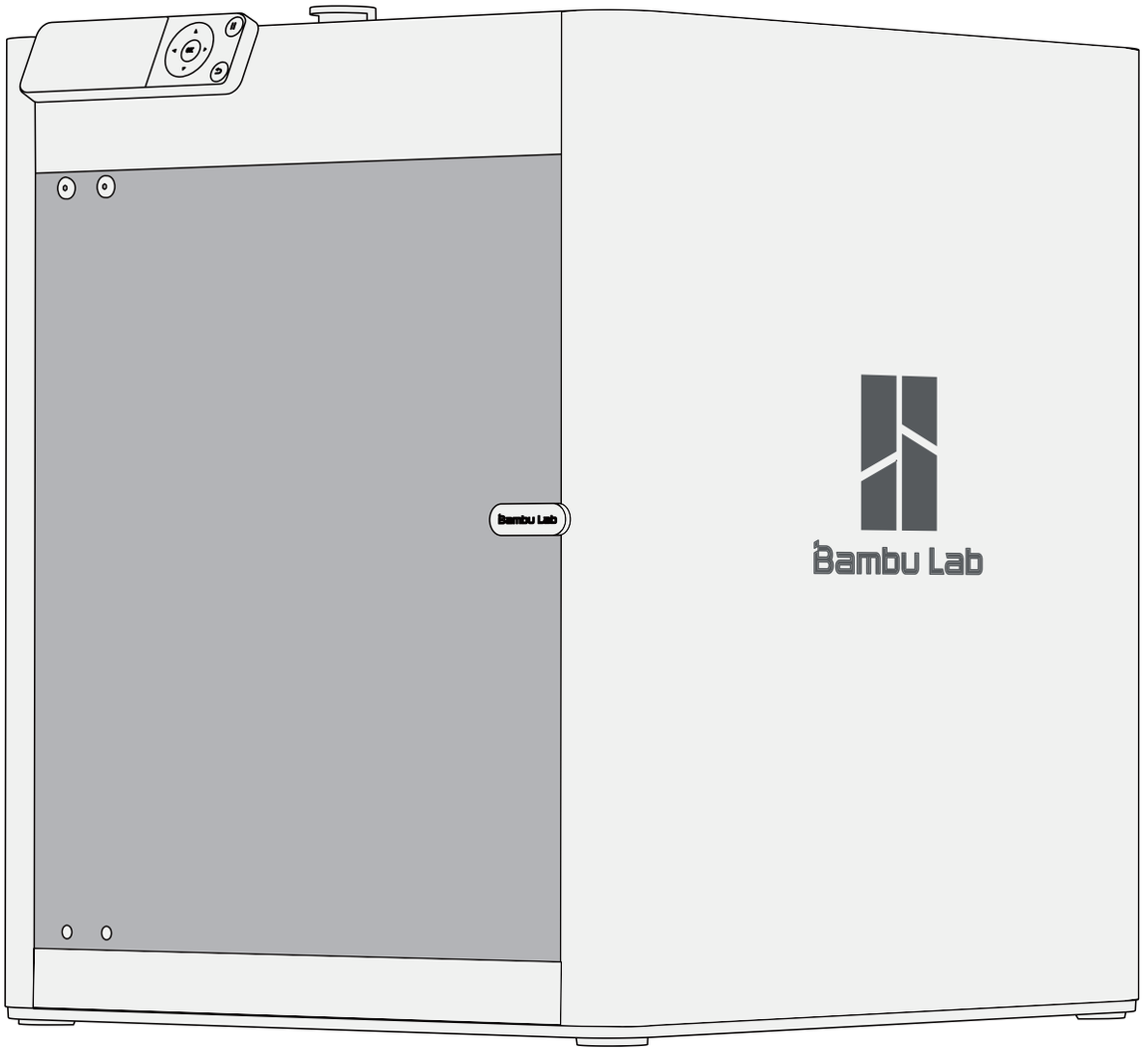

Bambu Studio & Bambu Handy

https://bambulab.com/download

Component Introduction

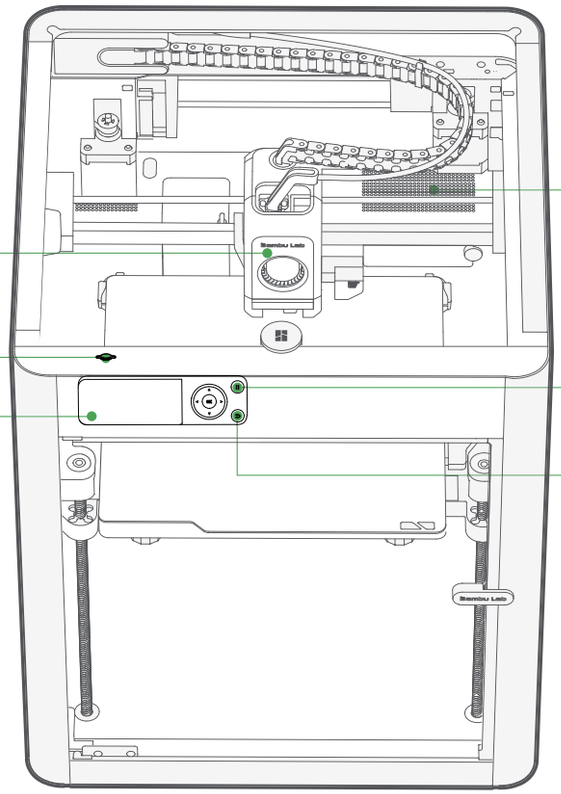

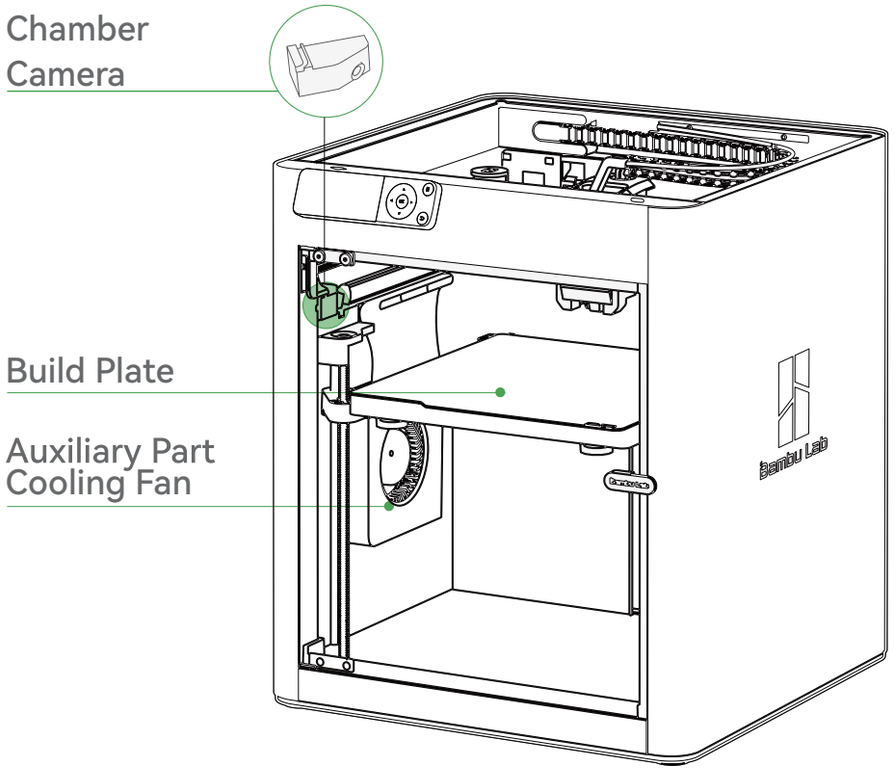

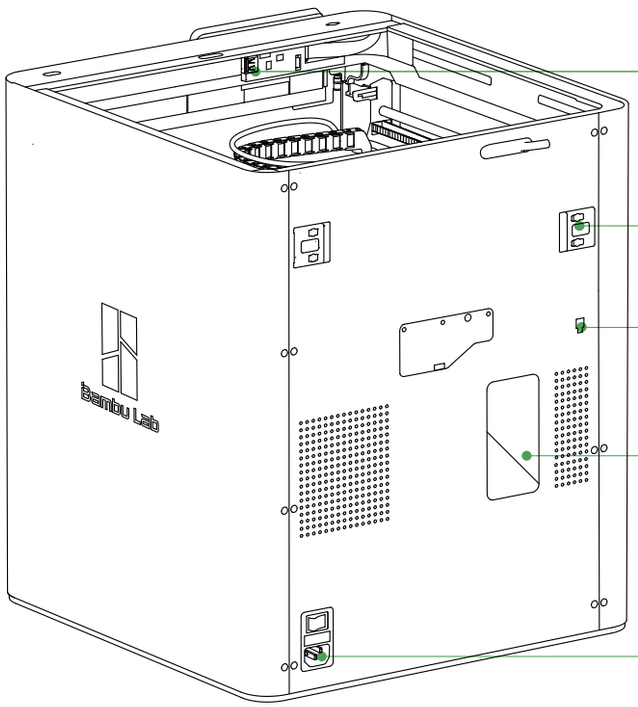

Accessory Specification

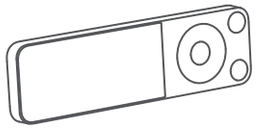

Screen

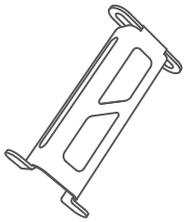

Spool Holder

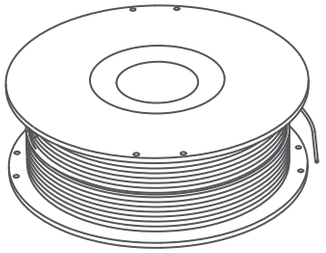

Filament

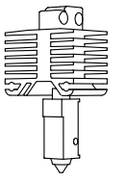

Spare Hot End

Nozzle Wiping Pad

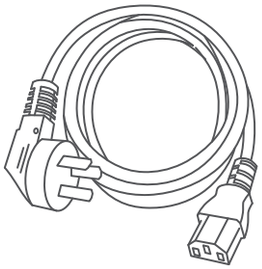

Power Cord

Unclogging Pin Tool

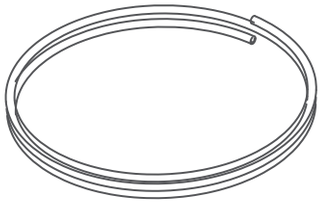

PTFE Tube

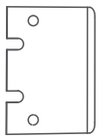

Bambu Scraper

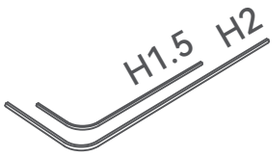

Allen Key H1.5
Allen Key H2

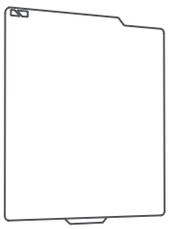

Build Plate
(Pre-installed)

Tool Head Unlock

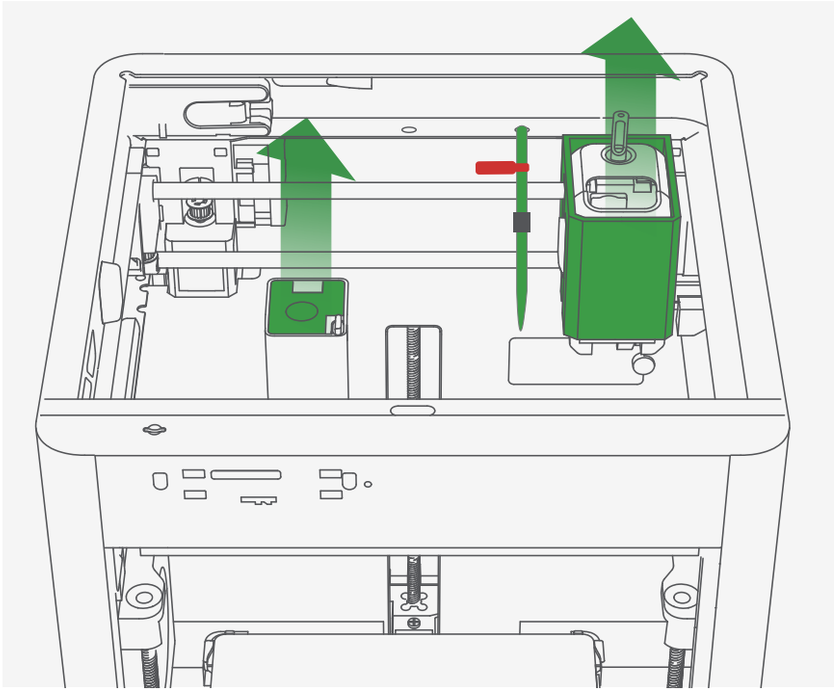

Remove the carboard from the tool head.
Romove the foam from the excess chute.

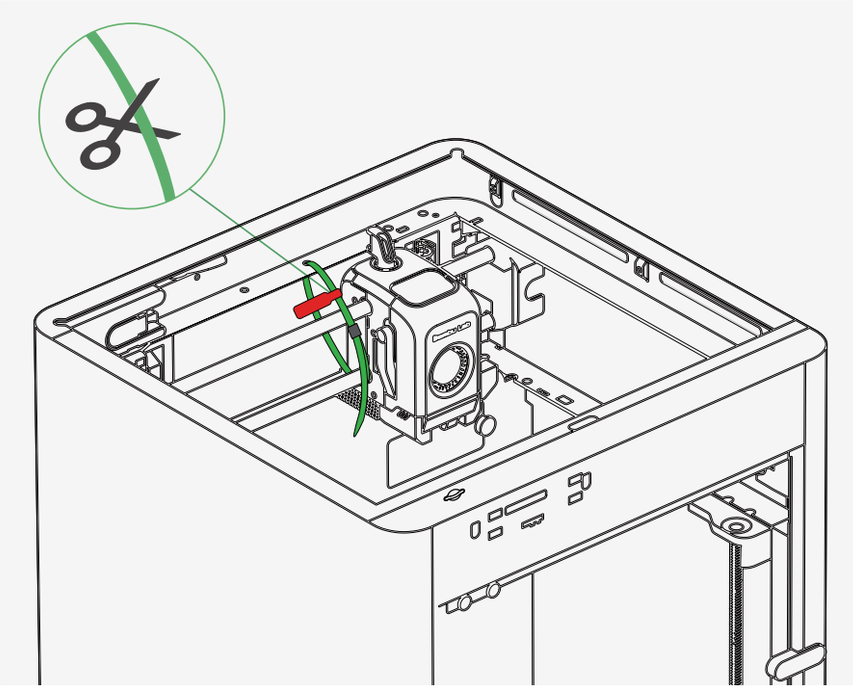

Cut the zip tie securing the toolhead.

Spool Holder Assembly

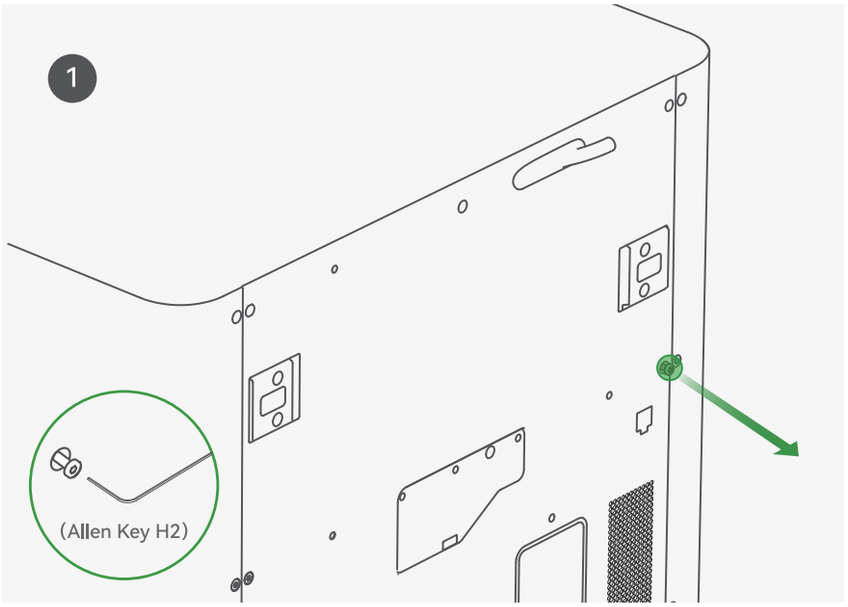

Remove the screws as pictured with an Allen Key H2.

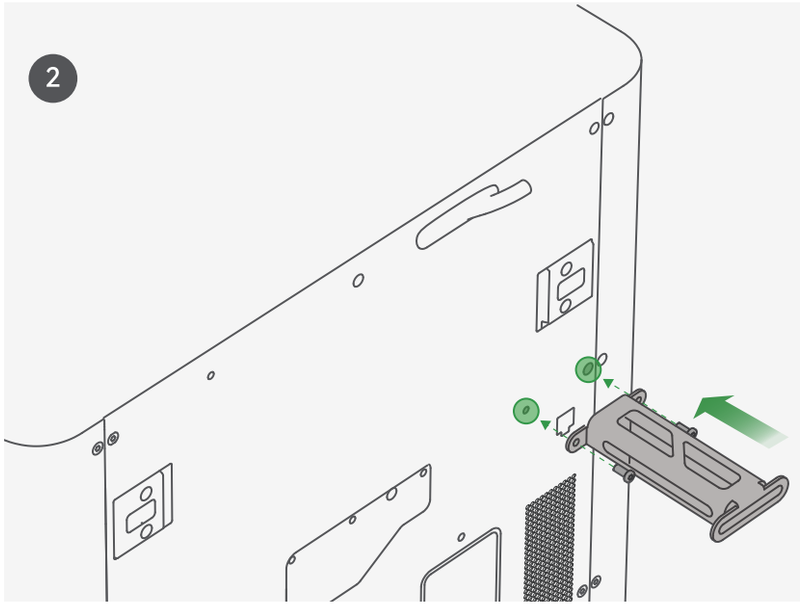

Secure the spool holder with two screws from the accessory box.

Attention: Please use the short end of the Allen Key to unlock the screws.

Hot Bed Unlock & Screen Installation

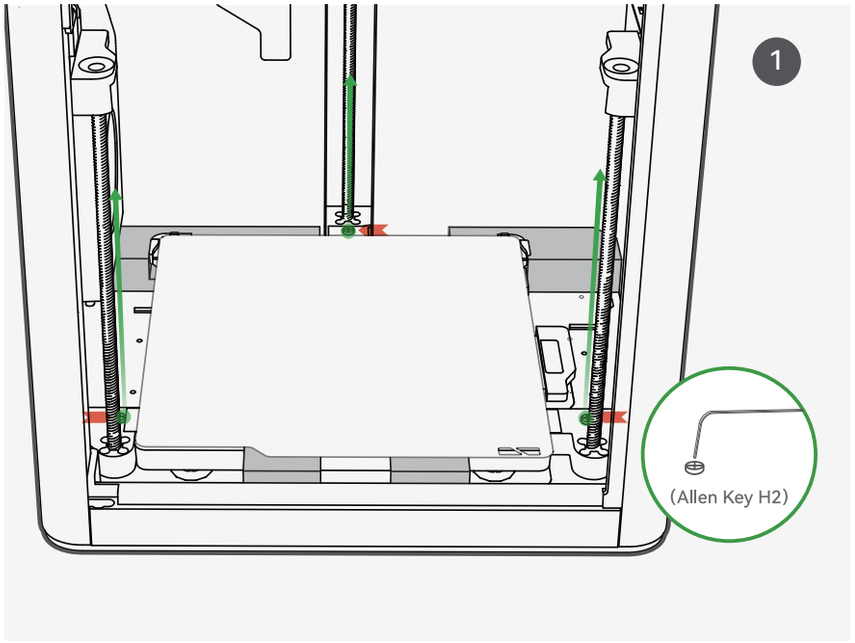

Remove the three screws with an Allen Key H2 to unlock the hot bed.

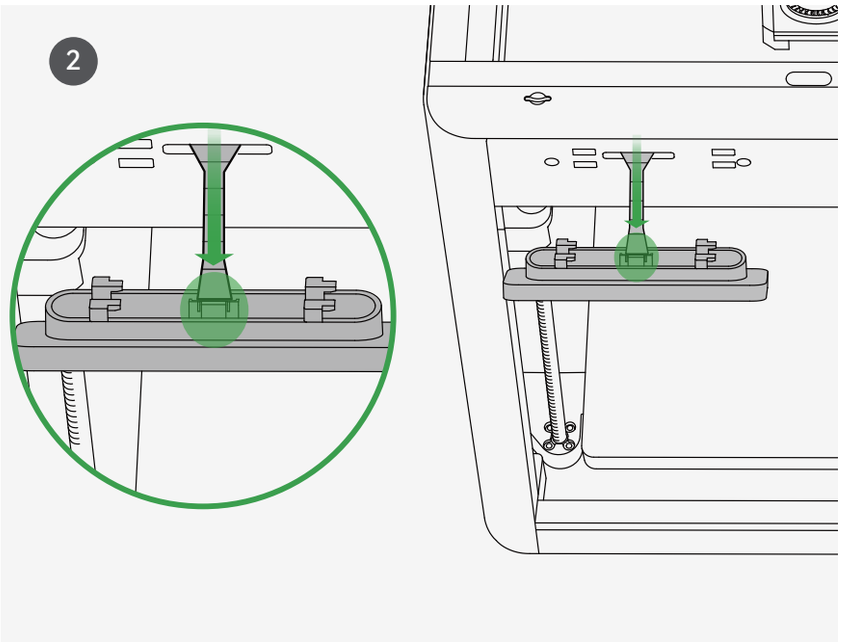

Insert the LCD cable into the port by plugging it into the terminal as pictured.

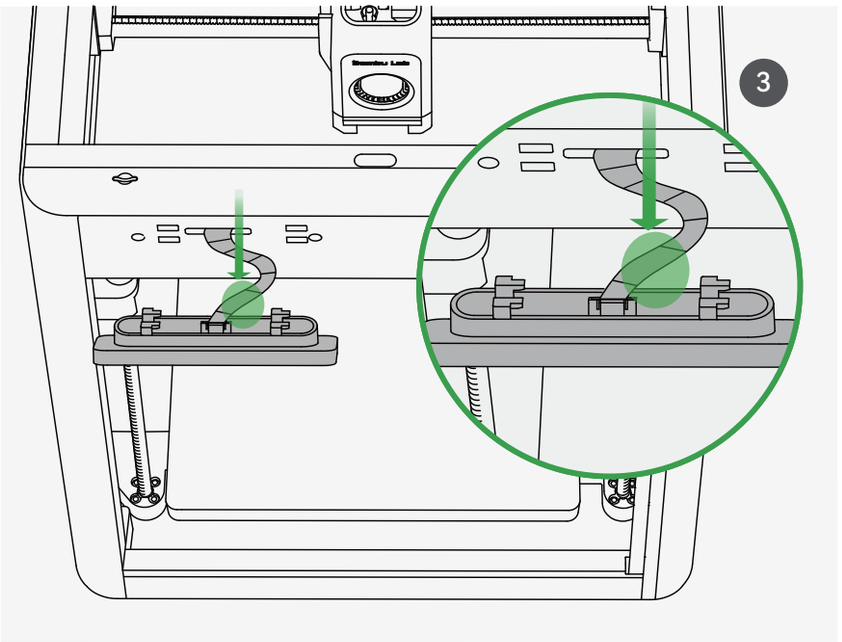

Attention: Bend the LCD cable towards the opening on the back of the screen as pictured.

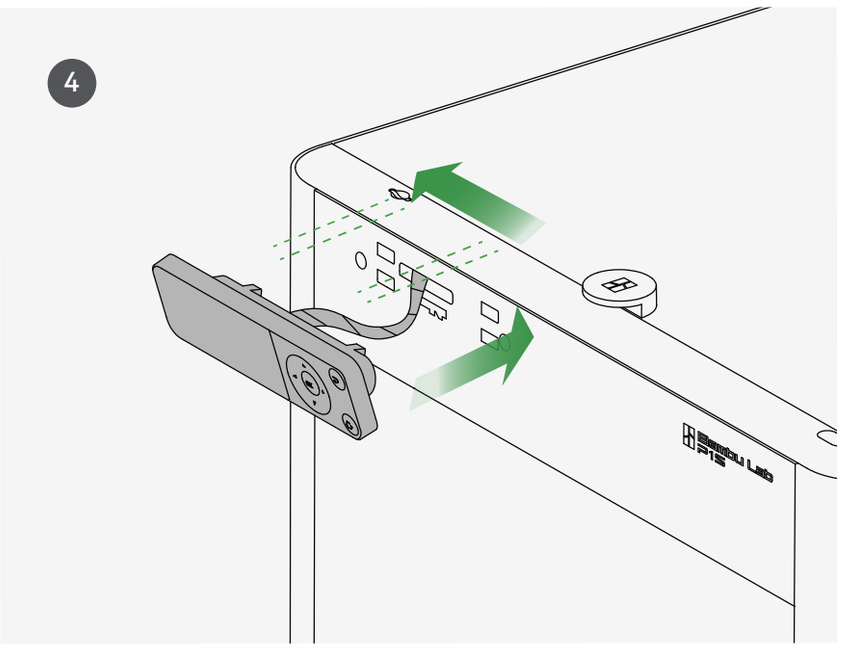

Inset the screen back to the slot on the printer, then lock it by pushing it to the left.

Printer Binding

1. Download the Bambu Handy App. Register and log in to your Bambu Lab account.

2. Connect the printer to power. Follow the instructions on the screen until getting to the page shown on the right side.

3. Use Bambu Handy to scan the QR code on the screen, and bind your printer with your Bambu Lab account.

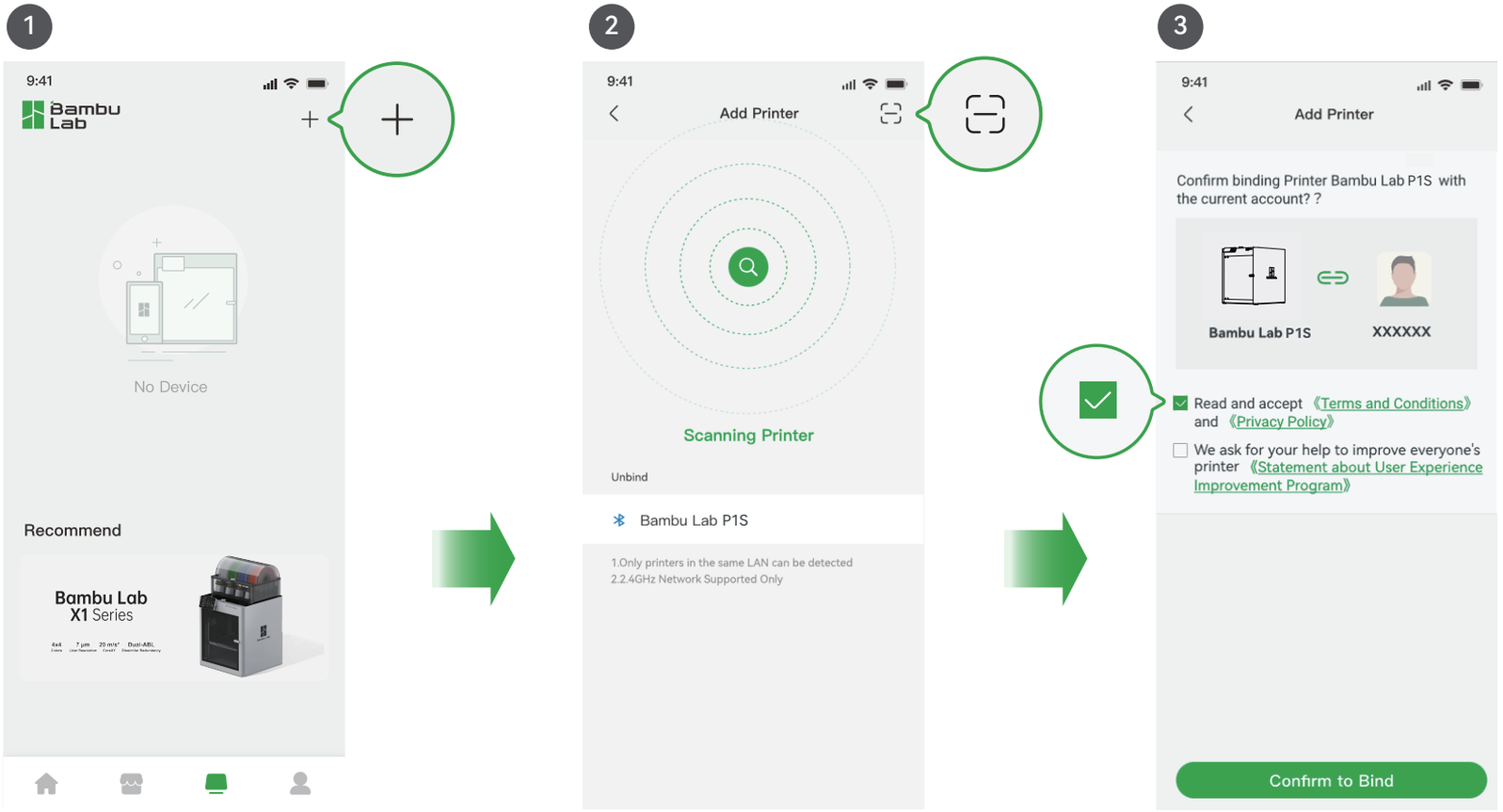

4. Follow the instructions on the screen to complete the initial calibration.
It is normal to have vibration and noise during the calibration process.

DO NOT remove the protective foam from beneath the hot bed until after the initial calibration is complete.

First Print

1

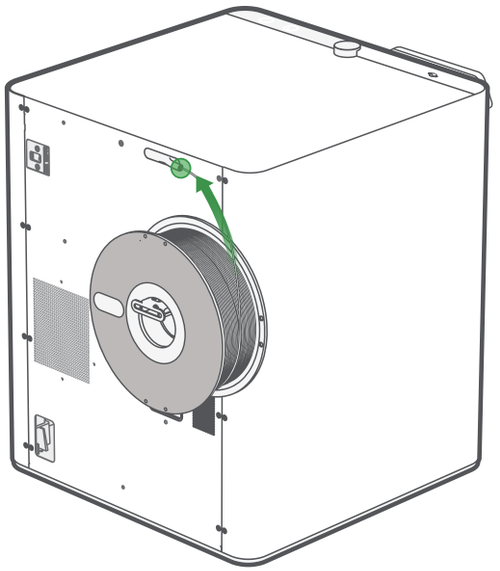

Insert filament into the PTFE Tube. Keep pushing the filament until it can not move forward.

*We recommend using the supplied Bambu PLA for your first test print.

2

Select " "-" ", and heat the nozzle to the recommended temperature for the filament. Select " "-" E "-" " several times until the filament comes out from the nozzle and cannot be pulled out from the PTFE tube anchor manually.

3

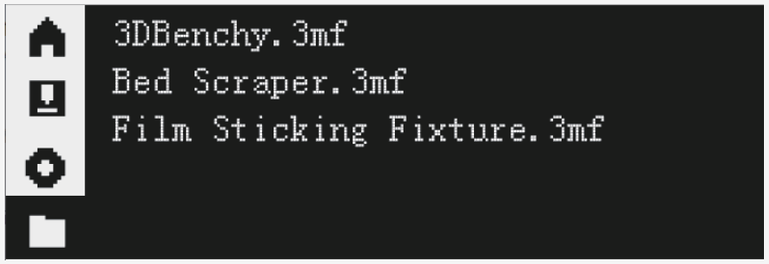

Select " " and select a file to start the first print.

*We recommend using one of the pre-loaded files as a first test print.
All the pre-loaded files can be printed with PLA Basic or PLA Matte.

Bambu Studio

Download Bambu Studio: https://bambulab.com/en/download/studio

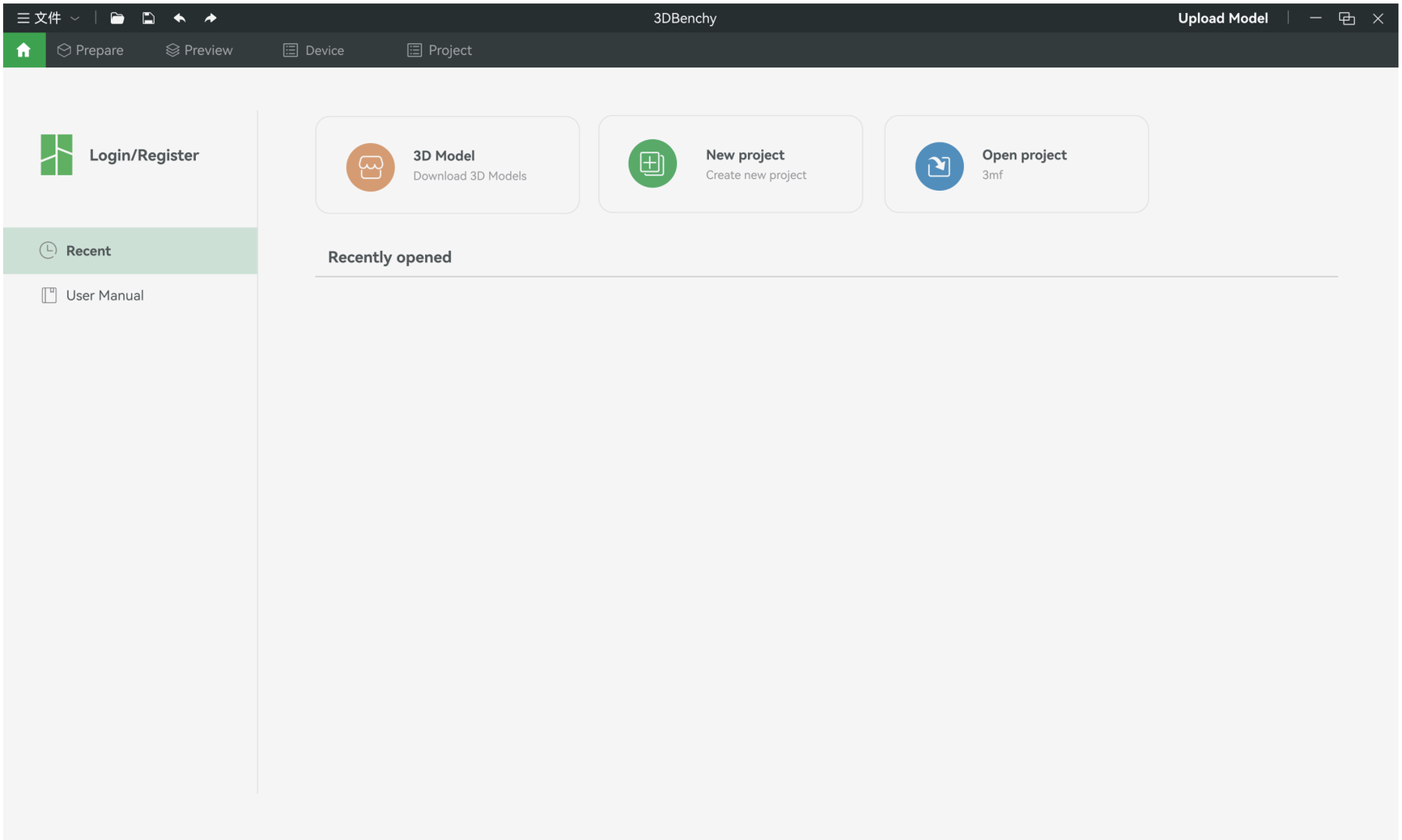

Log in to Bambu Studio with your Bambu Lab account, which is the same for the Bambu Online store. Create or open a project.

Bambu Studio

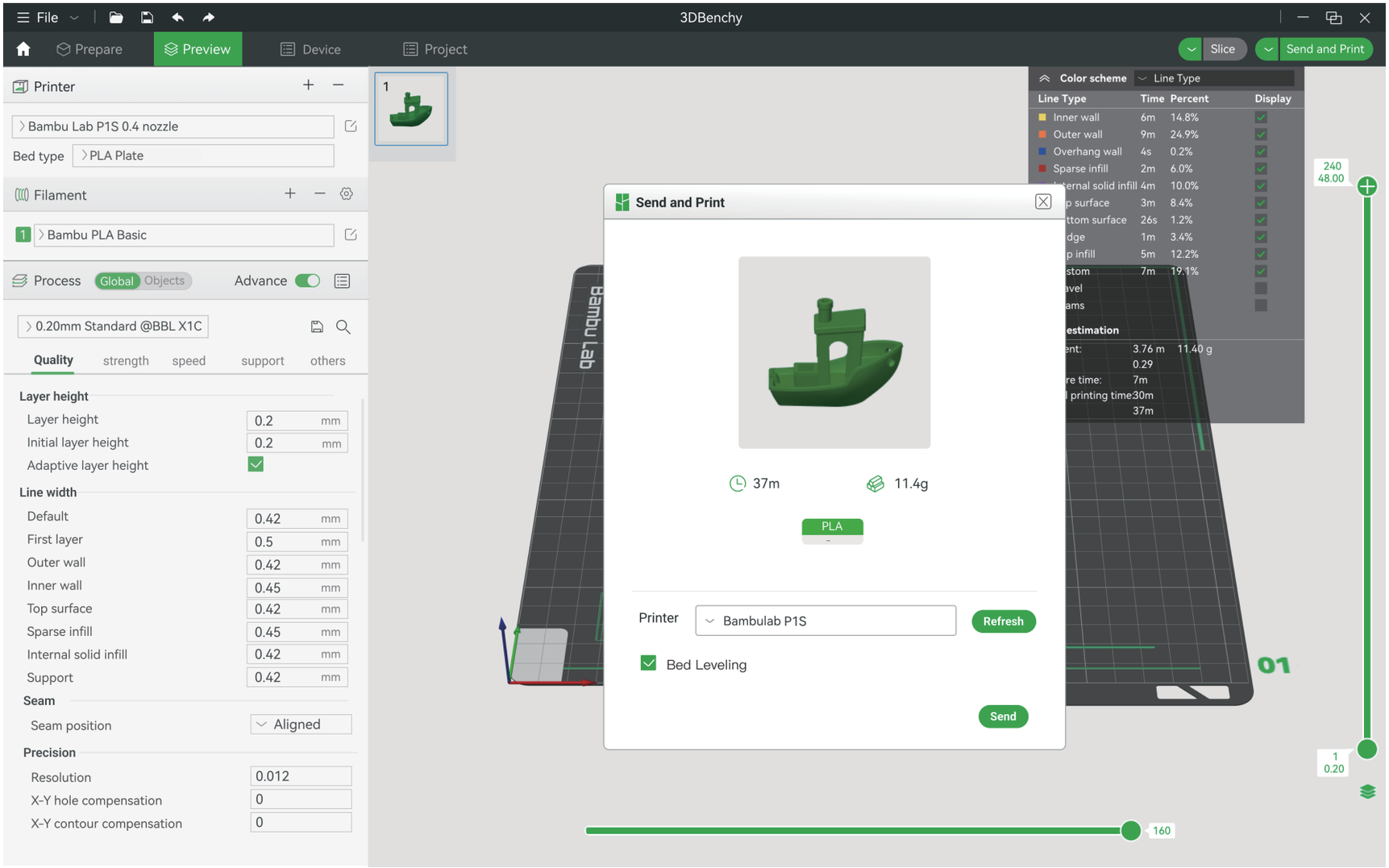

Slice the model, select your printer and send the model to print.

Bambu Studio

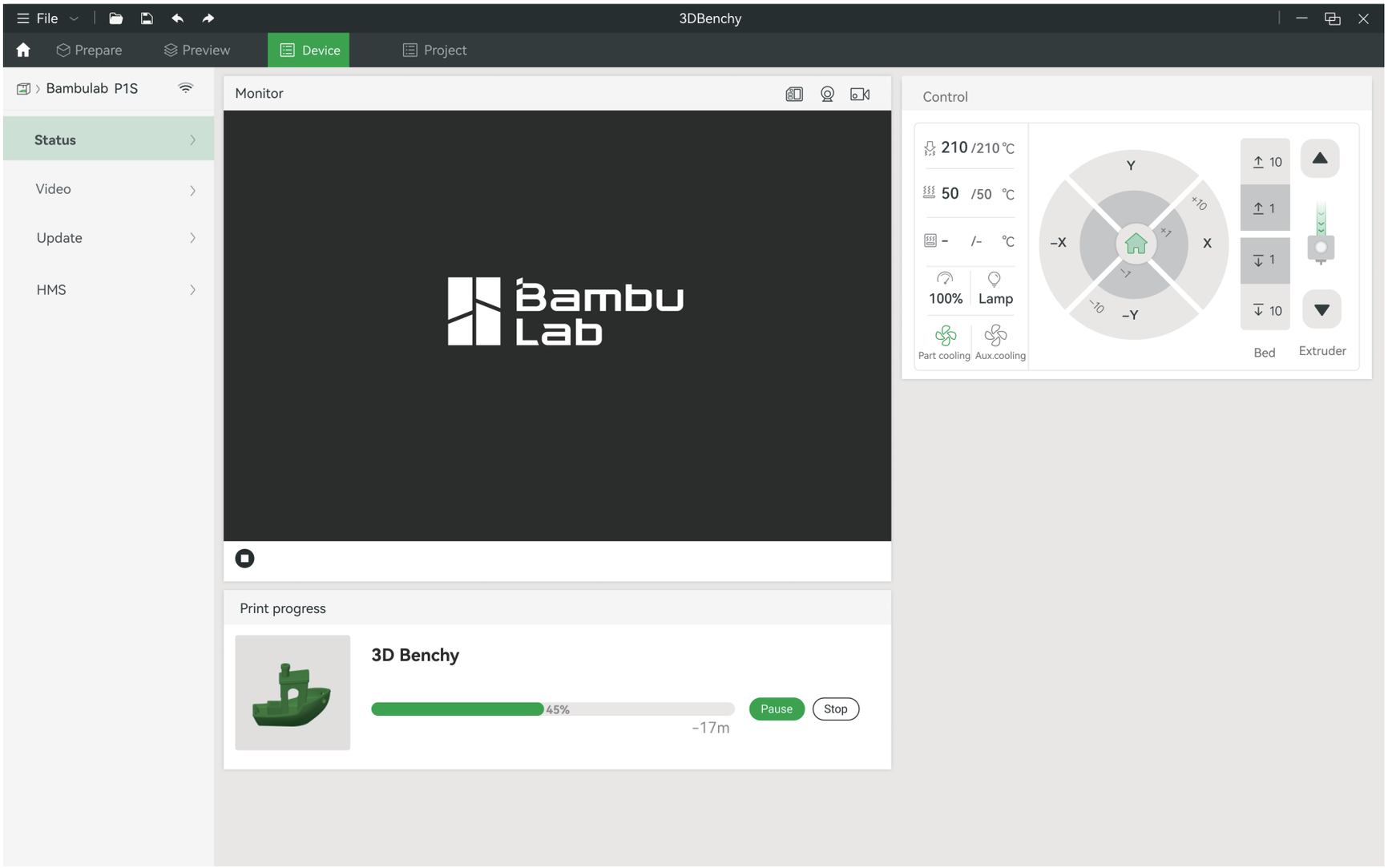

During printing, you can remotely monitor your print, or pause/stop printing on the "Device" interface.

Specification

Item		Specification
Printing Technology		Fused Deposition Modeling
Body	Build Volume(W*D*H)	256*256*256 mm^3
	Chassis	Steel
	Shell	Plastic & Glass
Toolhead	Hot End	All-Metal
	Extruder Gears	Steel
	Nozzle	Stainless Steel
	Max Hot End Temperature	300℃
	Nozzle Diameter (Included)	0.4 mm
	Nozzle Diameter (Optional)	0.2 mm, 0.6 mm, 0.8 mm
	Filament Cutter	Yes
	Filament Diameter	1.75 mm
Heatbed	Compatible Build Plate	Bambu Textured PEI Plate Bambu Cool Plate Bambu Engineering Plate Bambu High Temperature Plate
	Max Build Plate Temperature	100℃
Speed	Max Speed of Toolhead	500 mm/s
	Max Acceleration of Toolhead	20 m/s^2
	Max Hot End Flow	32 mm^3/s @ABS(Model: 150*150mm single wall; Material: Bambu ABS; Temperature: 280℃)
Cooling	Part Cooling Fan	Closed Loop Control
	Hot End Fan	Closed Loop Control
	Control Board Fan	Closed Loop Control
	Chamber Temperature Regulator Fan	Closed Loop Control
	Auxiliary Part Cooling Fan	Closed Loop Control
	Air Filter	Activated Carbon Filter
Supported Filament	PLA, PETG, TPU, ABS, ASA, PVA, PET	Ideal
	PA, PC	Capable
	Carbon/Glass Fiber Reinforced Polymer	Not Recommended
Sensors	Chamber Monitoring Camera	Low Rate Camera 1280 x 720 / 0.5fps , Timelapse Supported
	Filament Run Out Sensor	Yes
	Filament Odometry	Optional with AMS
	Power Loss Recover	Yes

Specification

Physical Dimensions	Dimensions(W×D×H)	389*389*458mm³
	Net Weight	12.95kg
Electrical Requirements	Input Voltage	100-240 VAC, 50/60 Hz
	Max Power	1000W@220V, 350W@110V
	USB Output Power	5V/1.5A
Electronics	Display	2.7-inch 192x64 Screen
	Connectivity	Wi-Fi, Bluetooth, Bambu-Bus
	Storage	Micro SD Card
	Control Interface	Button, APP, PC Application
	Motion Controller	Dual-Core Cortex M4
Software	Slicer	Bambu Studio Support third party slicers which export standard G-code such as Superslicer, Prusaslicer and Cura, but certain advanced features may not be supported.
	Slicer Supported OS	MacOS, Windows
Wifi	Frequency Range	2412MHz-2472MHz(CE) 2412MHz-2462MHz(FCC) 2400MHz-2483.5MHz(SRRC)
	Transmitter Power（EIRP）	≤21.5dBm(FCC) ≤20dBm(CE/SRRC)
	Protocol	IEEE802.11 b/g/n
Bluetooth	Frequency Band	2402MHz-2480MHz(CE/FCC) 2400MHz-2483.5MHz(SRRC)
	Transmitter Power（EIRP）	≤20dBm(FCC/SRRC) <10dBm(CE)
	Protocol	BLE5.0

Bambu Studio
Bambu Handy

https://bambulab.com/download

Customer Support

Please visit the Bambu Lab Wiki for more setup and maintenance tutorials.

https://wiki.bambulab.com/en/home

Bambulab Wiki

If you need support, please try either of the two approaches:

Approach 1: Create a support ticket on the Official Website

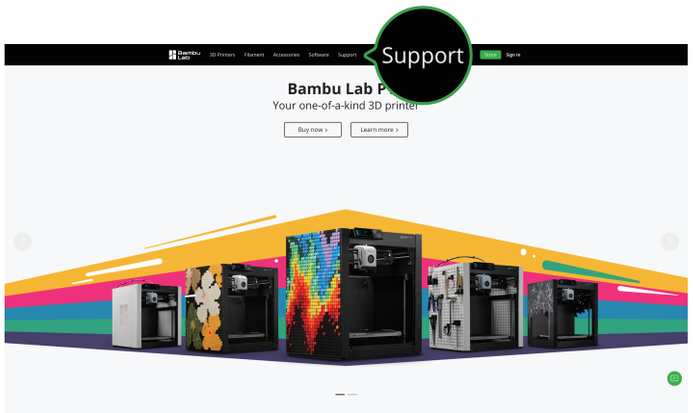

Approach 2: Create a support ticket on the Bambu Handy App

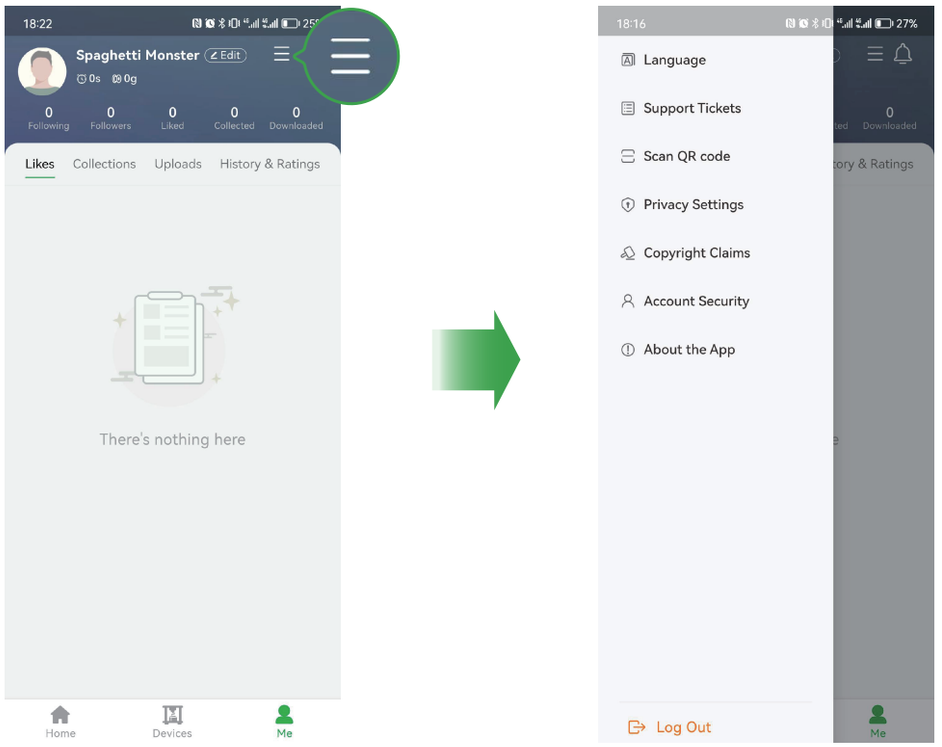

Bambu Lab

Enjoy!

www.bambulab.com